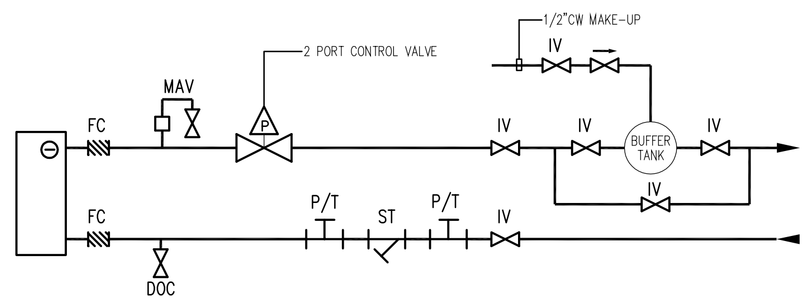

TYPICAL COOLING COIL VALVE ARRANGEMENT

CHILLED WATER SCHEMATIC LEGEND

VALVES

FM	FLOW METER
LSV	LOCKSHIELD VALVE
IV	ISOLATING VALVE
SC	STOPCOCK
BDC	BLOW DOWN COCK
DOC	DRAIN COCK
	PRESSURE INDEPENDANT CONTROL VALVE
NRV	NON RETURN VALVE
PRV	PRESSURE REDUCING VALVE

MEASURING POINTS

TG	TEMPERATURE GAUGE
PG	PRESSURE GAUGE
P/T	PRESSURE / TEMPERATURE TEST PORT

FAN COIL UNITS

WFCU	WALL FAN COIL UNIT
CMCU	CEILING MOUNTED CASSETTE UNIT
CSU	CEILING SUSPENDED UNIT
AHU	AIR HANDLER UNIT
CCU	CEILING CONCEALED UNIT

ANCILLARY COMPONENTS

FC	FLEXIBLE CONNECTION
AAV	AUTOMATIC AIR VENT
MAV	MANUAL AIR VENT
ST	'Y' TYPE STRAINER
SV	SAFETY VALVE
TU	TUNDISH AND DRAIN TO NEAREST GULLEY
	CHILLED WATER CIRCULATING PUMP
	TWIN CHILLED WATER CIRCULATING PUMP
ST	BOWL TYPE STRAINER WITH BLOW DOWN COCK

AIR-CONDITIONING LEGEND

OBD(M)	MOTORISED DAMPER
OBD	OPPOSED BLADE DAMPER
SD	SPLITTER DAMPER
	FAN SWITCH
	THERMOSTAT A/C CONTROL SWITCH (ON/OFF)
CMCU	CEILING MOUNTED CASSETTE UNIT.
CCU	CEILING CONCEALED UNIT.
WFCU	WALL FAN COIL UNIT.
VFCU	VERTICAL FAN COIL UNIT
AHU	AIR HANDLER UNIT.
FMFCU	FLOOR MOUTED FAN COIL UNIT
ACCU	AIR COOLED CONDENSING UNIT.
CU	CONDENSING UNIT.
RH	RANGE HOOD
	EXHAUST AIR GRILLE
	EXHAUST DUCT SECTION
	RETURN AIR GRILLE
	SUPPLY AIR DIFFUSER
	SUPPLY AIR DUCT SECTION
	OUTSIDE AIR DIFFUSER
	DOUBLE THICKNESS TURNING VANES
	FLEXIBLE DUCT
DG-1	DOOR GRILLE
UC	DOOR UNDERCUT
	TRANSITION FROM SQUARE TO ROUND DUCT
	FAN
MD	MOTION DETECTOR
TC	TIME CLOCK
BDD	BACK DRAFT DAMPER
	2 HOUR RATED FIRE DAMPER
———	CHILLED WATER SUPPLY
- - - -	CHILLED WATER RETURN
AD	ACCESS DOOR

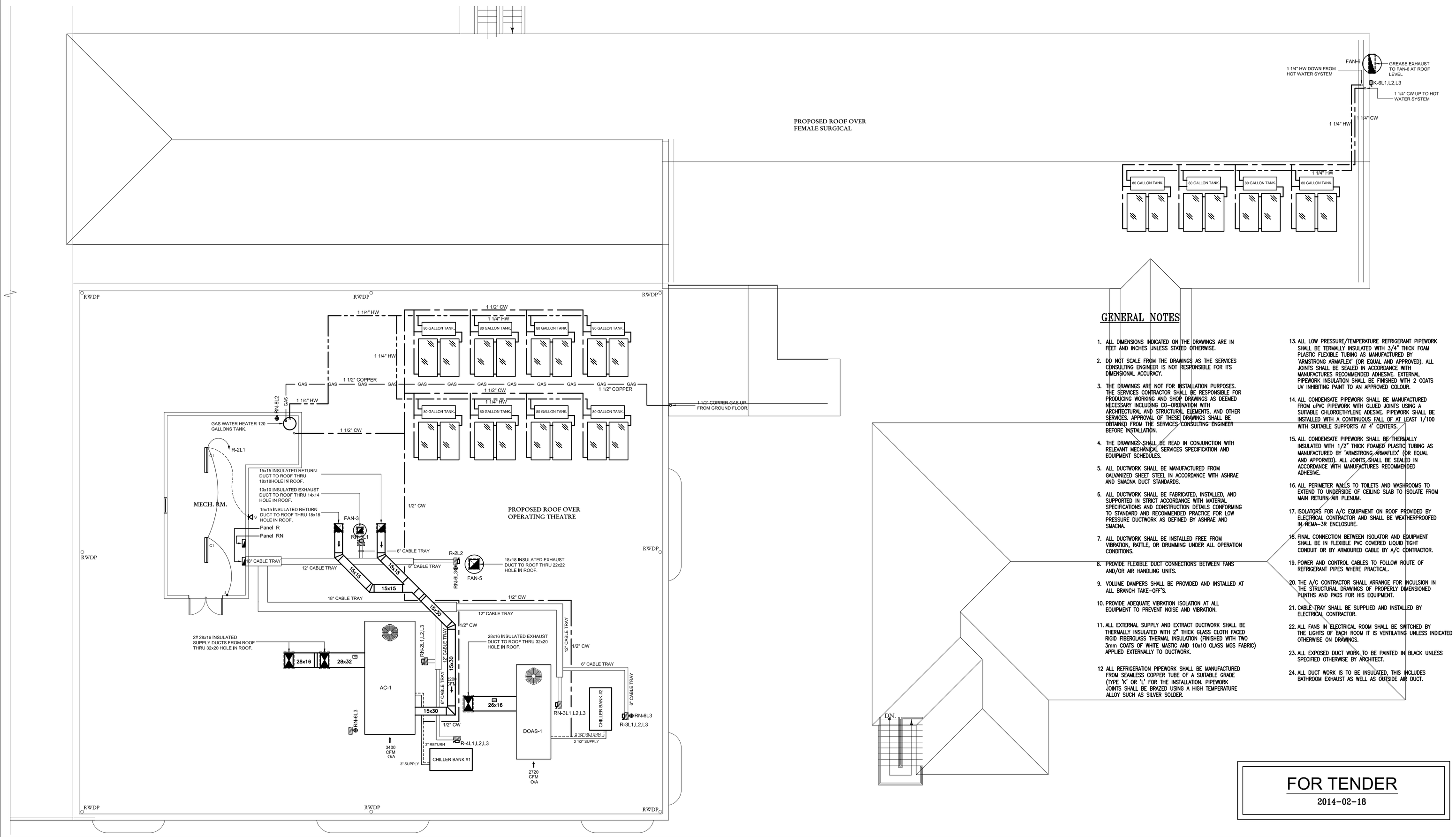

GENERAL NOTES

1. ALL DIMENSIONS INDICATED ON THE DRAWINGS ARE IN FEET AND INCHES UNLESS STATED OTHERWISE.
2. DO NOT SCALE FROM THE DRAWINGS AS THE SERVICES CONSULTING ENGINEER IS NOT RESPONSIBLE FOR ITS DIMENSIONAL ACCURACY.
3. THE DRAWINGS ARE NOT FOR INSTALLATION PURPOSES. THE SERVICES CONTRACTOR SHALL BE RESPONSIBLE FOR PRODUCING WORKING AND SHOP DRAWINGS AS DEEMED NECESSARY INCLUDING CO-ORDINATION WITH ARCHITECTURAL AND STRUCTURAL ELEMENTS, AND OTHER SERVICES. APPROVAL OF THESE DRAWINGS SHALL BE OBTAINED FROM THE SERVICES CONSULTING ENGINEER BEFORE INSTALLATION.
4. THE DRAWINGS SHALL BE READ IN CONJUNCTION WITH RELEVANT MECHANICAL SERVICES SPECIFICATION AND EQUIPMENT SCHEDULES.
5. ALL DUCTWORK SHALL BE MANUFACTURED FROM GALVANIZED SHEET STEEL IN ACCORDANCE WITH ASHRAE AND SMACNA DUCT STANDARDS.
6. ALL DUCTWORK SHALL BE FABRICATED, INSTALLED, AND SUPPORTED IN STRICT ACCORDANCE WITH MATERIAL SPECIFICATIONS AND CONSTRUCTION DETAILS CONFORMING TO STANDARD AND RECOMMENDED PRACTICE FOR LOW PRESSURE DUCTWORK AS DEFINED BY ASHRAE AND SMACNA.
7. ALL DUCTWORK SHALL BE INSTALLED FREE FROM VIBRATION, RATTLE, OR DRUMMING UNDER ALL OPERATION CONDITIONS.
8. PROVIDE FLEXIBLE DUCT CONNECTIONS BETWEEN FANS AND/OR AIR HANDLING UNITS.
9. VOLUME DAMPERS SHALL BE PROVIDED AND INSTALLED AT ALL BRANCH TAKE-OFF'S.
10. PROVIDE ADEQUATE VIBRATION ISOLATION AT ALL EQUIPMENT TO PREVENT NOISE AND VIBRATION.
11. ALL EXTERNAL SUPPLY AND EXTRACT DUCTWORK SHALL BE THERMALLY INSULATED WITH 2" THICK GLASS CLOTH FACED RIGID FIBERGLASS THERMAL INSULATION (FINISHED WITH TWO 3mm COATS OF WHITE MASTIC AND 10x10 GLASS MCS FABRIC) APPLIED EXTERNALLY TO DUCTWORK.
12 ALL REFRIGERATION PIPEWORK SHALL BE MANUFACTURED FROM SEAMLESS COPPER TUBE OF A SUITABLE GRADE (TYPE 'K' OR 'L' FOR THE INSTALLATION. PIPEWORK JOINTS SHALL BE BRAZED USING A HIGH TEMPERATURE ALLOY SUCH AS SILVER SOLDER.
13. ALL LOW PRESSURE/TEMPERATURE REFRIGERANT PIPEWORK SHALL BE TERMALLY INSULATED WITH 3/4" THICK FOAM PLASTIC FLEXIBLE TUBING AS MANUFACTURED BY "ARMSTRONG ARMAFLEX" (OR EQUAL AND APPROVED). ALL JOINTS SHALL BE SEALED IN ACCORDANCE WITH MANUFACTURES RECOMMENDED ADHESIVE. EXTERNAL PIPEWORK INSULATION SHALL BE FINISHED WITH 2 COATS UV INHIBITING PAINT TO AN APPROVED COLOUR.
14. ALL CONDENSATE PIPEWORK SHALL BE MANUFACTURED FROM uPVC PIPEWORK WITH GLUED JOINTS USING A SUITABLE CHLOROETHYLENE ADESIVE. PIPEWORK SHALL BE INSTALLED WITH A CONTINUOUS FALL OF AT LEAST 1/100 WITH SUITABLE SUPPORTS AT 4' CENTERS.
15. ALL CONDENSATE PIPEWORK SHALL BE THERMALLY INSULATED WITH 1/2" THICK FOAMED PLASTIC TUBING AS MANUFACTURED BY "ARMSTRONG ARMAFLEX" (OR EQUAL AND APPORVED). ALL JOINTS SHALL BE SEALED IN ACCORDANCE WITH MANUFACTURES RECOMMENDED ADHESIVE.
16. ALL PERIMETER WALLS TO TOILETS AND WASHROOMS TO EXTEND TO UNDERSIDE OF CEILING SLAB TO ISOLATE FROM MAIN RETURN AIR PLENUM.
17. ISOLATORS FOR A/C EQUIPMENT ON ROOF PROVIDED BY ELECTRICAL CONTRACTOR AND SHALL BE WEATHERPROOFED IN NEMA-3R ENCLOSURE.
18. FINAL CONNECTION BETWEEN ISOLATOR AND EQUIPMENT SHALL BE IN FLEXIBLE PVC COVERED LIQUID TIGHT CONDUIT OR BY ARMOURED CABLE BY A/C CONTRACTOR.
19. POWER AND CONTROL CABLES TO FOLLOW ROUTE OF REFRIGERANT PIPES WHERE PRACTICAL.
20. THE A/C CONTRACTOR SHALL ARRANGE FOR INCULSION IN THE STRUCTURAL DRAWINGS OF PROPERLY DIMENSIONED PLINTHS AND PADS FOR HIS EQUIPMENT.
21. CABLE TRAY SHALL BE SUPPLIED AND INSTALLED BY ELECTRICAL CONTRACTOR.
22. ALL FANS IN ELECTRICAL ROOM SHALL BE SWITCHED BY THE LIGHTS OF EACH ROOM IT IS VENTILATING UNLESS INDICATED OTHERWISE ON DRAWINGS.
23. ALL EXPOSED DUCT WORK TO BE PAINTED IN BLACK UNLESS SPECIFIED OTHERWISE BY ARCHITECT.
24. ALL DUCT WORK IS TO BE INSULATED, THIS INCLUDES BATHROOM EXHAUST AS WELL AS OUTSIDE AIR DUCT.

FOR TENDER
2014-02-18

No.	REVISIONREVISION	DATE
3.	CHILLED PIPEWORK TO AC-1 CHANGED TO 3"	K.B
2.	BUFFER TANK ADDED TO COOLING COIL SCHEMATIC.	2014-02-18
1.	1/2" CW MAKE-UP ADDED TO CHILLED WATER PIPEWORK.	

This Drawing Is To Be Read With All Relevant Architectural, Structural And MEP Drawings. Report All Discrepancies, Omissions Or Errors To The Engineer.
IF IN DOUBT-ASK

LEVERAGE CONSULTING ENGINEERS INC.
#1 Erin Terrace, Brittons Cross Road, St. Michael BB14002, Barbados, W.I.

LEVERAGE CONSULTING ENGINEERS INC. HAS COPYRIGHT OF THIS DOCUMENT ©.

architect
MOULTON MAYERS ARCHITECTS

job name
MILTON CATO MEMORIAL HOSPITAL

drawing title
ROOF PLAN

drawn K. Bartlett	des/chk R. Foster	
scale 1/8"=1'-0"	date JUN. '12	status TENDER
job no. 120701	dwg. no. R-1	rev. 1