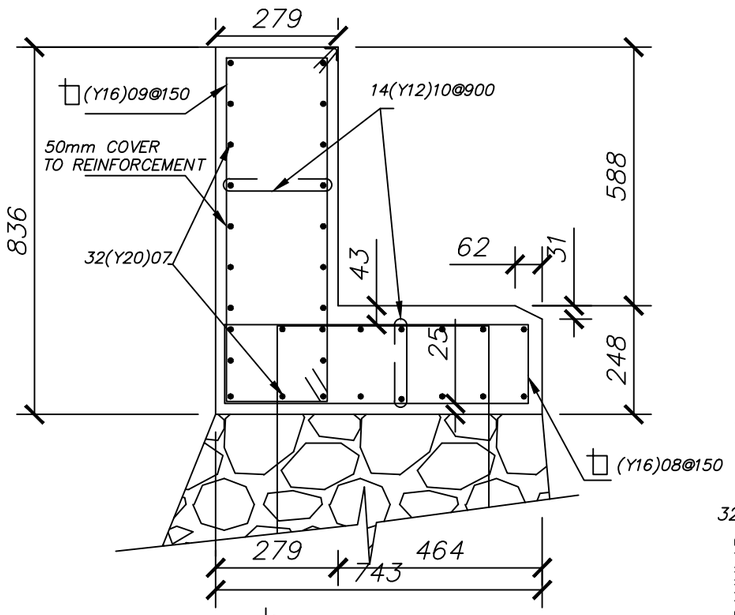

ABUTMEN DETAIL
scale: 1/20

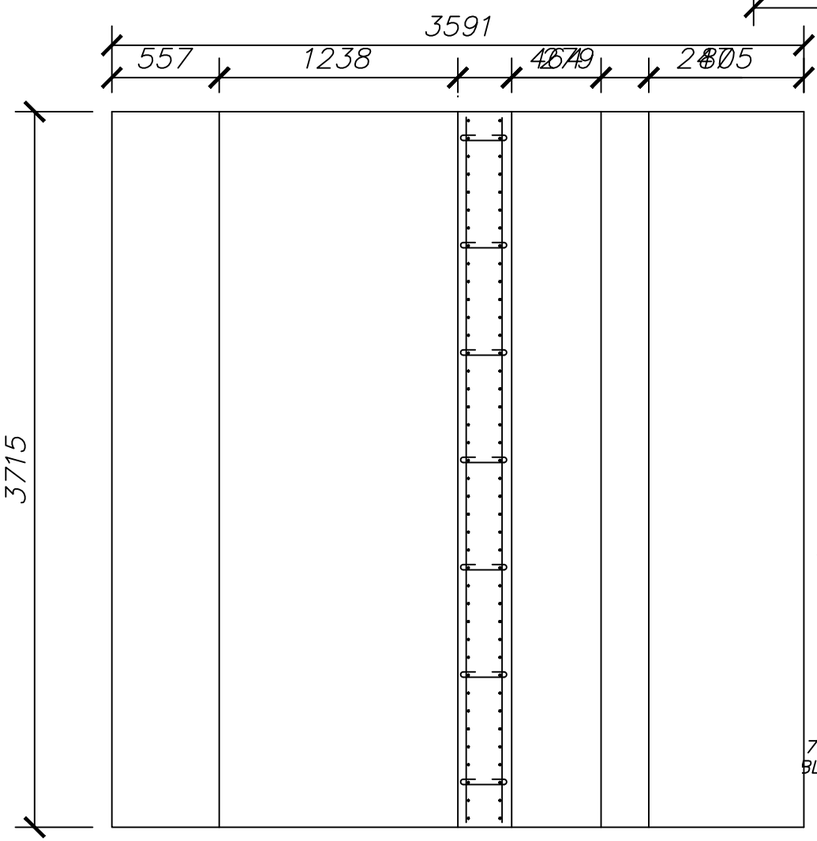

ABUTMEN PLAN
scale: 1/50

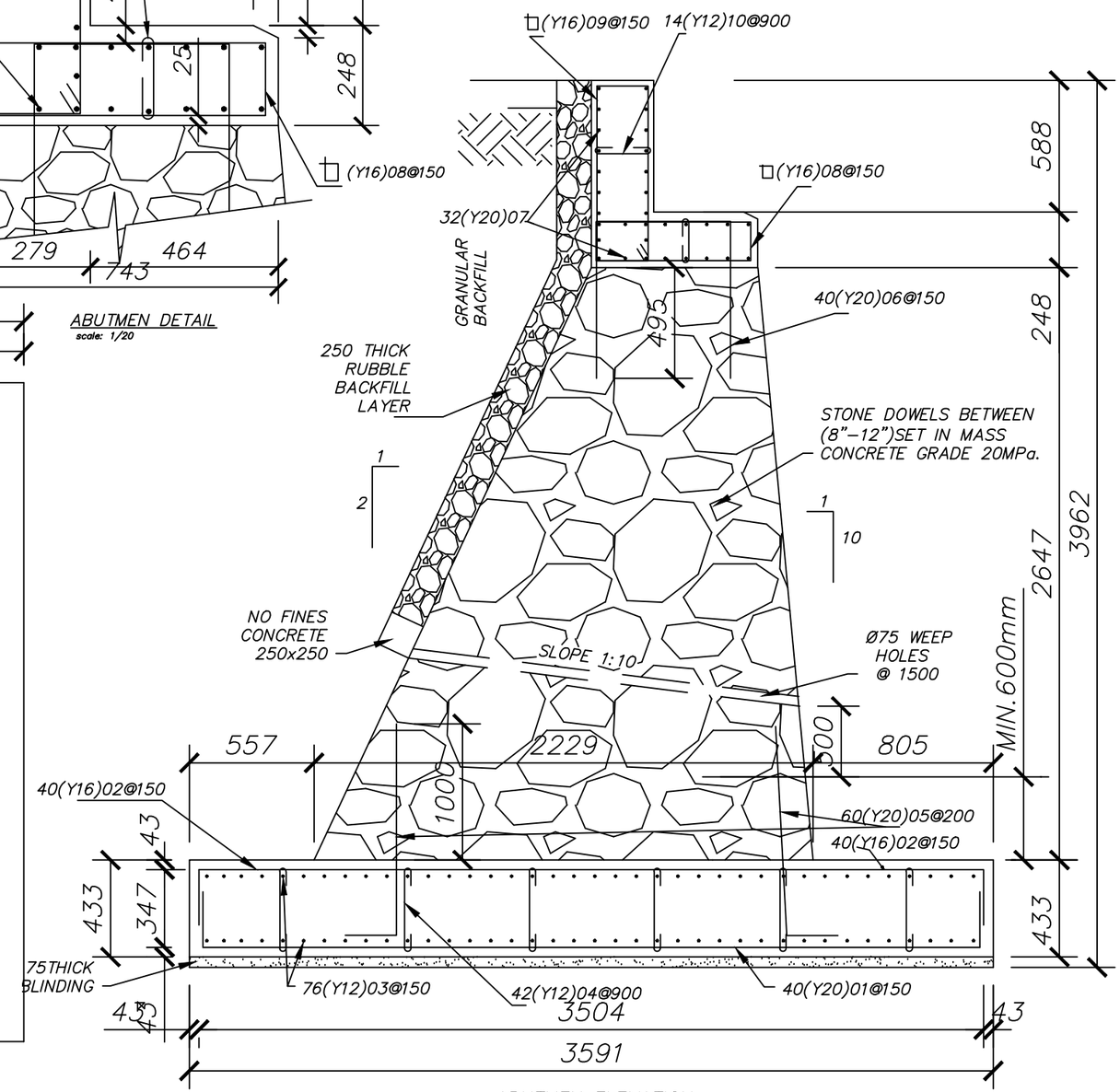

ABUTMEN ELEVATION
scale: 1/40

NOTES:

All Concrete
30,0Mpa=4350psi

Steel Grade 60 ksi

The Engineer must check the reinforcement in all structural elements before casting.

Bearing:
The Bearing shall be a Neoprene Pad with the following nominal capacity:

Vertical Load:
-350 KN maximum
-150 KN permanent

All dimensions in mm.

No:	DATE:	ISSUE:

MTW

MINISTRY of TRANSPORT, and WORKS

ENGINEERING and ARCHITECTURAL DIVISION,
HALIFAX St., KINGSTOWN,
St. VINCENT and the GRENADINES
TEL: 456-1111 ext. 571

CONSULTANTS:

CLIENT:

PROJECT:
BRIDGE . 17m
COLONARIE BYPASS. VARIANT II

TITLE:
ABUTMENT

PROJ. No:	SCALE: IND.	Design: Eng.Riverol	DWG. No.
	DATE: DIC.2009	CHECKED:	S03