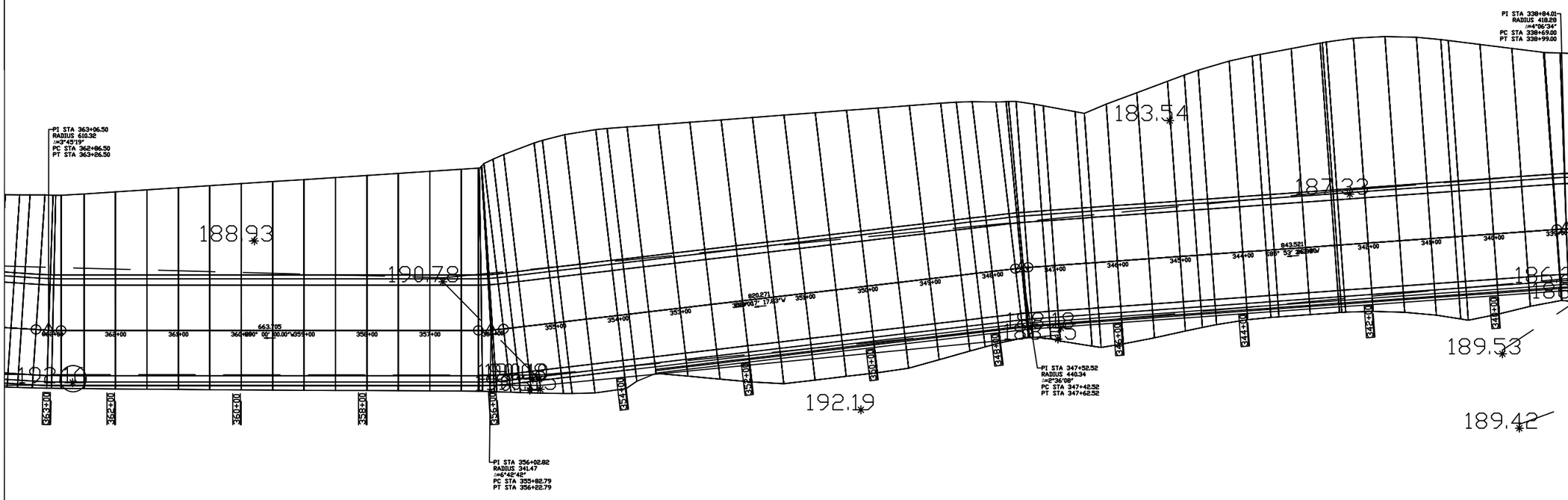

No:	DATE:	ISSUE:

MTWUDLG

MINISTRY of TRANSPORT WORKS, URBAN DEVELOPMENT AND LOCAL GOVERNMENT

PROJECT MANAGEMENT UNIT
HALIFAX St., KINGSTOWN,
St. VINCENT and the GRENADINES
TEL: 456-1086 ext. 375

CONSULTANTS:

CLIENT:
Government of St. Vincent & the Grenadines

PROJECT:
Rehabilitation of Congo Road and bridges

TITLE:
ROAD ALIGNMENT DETAIL CH339+00 TO CH363+00

PROJ. No:	SCALE:	DRAWN:	DWG. No.
	1" = 15'	YAC	RA15
	DATE:	CHECKED:	